SONY

HD DIGITAL VIDEOCASSETTE RECORDER

SRW-5000

HDCAM SR™ Tele-File MEMORY STICK™ CINEALTA

INSTALLATION MANUAL

1st Edition

Serial No. 10001 and Higher

⚠警告

このマニュアルは，サービス専用です。
お客様が，このマニュアルに記載された設置や保守，点検，修理などを行うと感電や火災，人身事故につながることがあります。
危険をさけるため，サービストレーニングを受けた技術者のみご使用ください。

⚠ WARNING

This manual is intended for qualified service personnel only.
To reduce the risk of electric shock, fire or injury, do not perform any servicing other than that contained in the operating instructions unless you are qualified to do so. Refer all servicing to qualified service personnel.

⚠ WARNUNG

Die Anleitung ist nur für qualifiziertes Fachpersonal bestimmt.
Alle Wartungsarbeiten dürfen nur von qualifiziertem Fachpersonal ausgeführt werden. Um die Gefahr eines elektrischen Schlages, Feuergefahr und Verletzungen zu vermeiden, sind bei Wartungsarbeiten strikt die Angaben in der Anleitung zu befolgen. Andere als die angegeben Wartungsarbeiten dürfen nur von Personen ausgeführt werden, die eine spezielle Befähigung dazu besitzen.

⚠ AVERTISSEMENT

Ce manual est destiné uniquement aux personnes compétentes en charge de l’entretien. Afin de réduire les risques de décharge électrique, d’incendie ou de blessure n’effectuer que les réparations indiquées dans le mode d’emploi à moins d’être qualifié pour en effectuer d’autres. Pour toute réparation faire appel à une personne compétente uniquement.

Attention-when the product is installed in Rack:

1. **Prevention against overloading of branch circuit**
   When this product is installed in a rack and is supplied power from an outlet on the rack, please make sure that the rack does not overload the supply circuit.

2. **Providing protective earth**
   When this product is installed in a rack and is supplied power from an outlet on the rack, please confirm that the outlet is provided with a suitable protective earth connection.

3. **Internal air ambient temperature of the rack**
   When this product is installed in a rack, please make sure that the internal air ambient temperature of the rack is within the specified limit of this product.

4. **Prevention against achieving hazardous condition due to uneven mechanical loading**
   When this product is installed in a rack, please make sure that the rack does not achieve hazardous condition due to uneven mechanical loading.

5. **Install the equipment while taking the operating temperature of the equipment into consideration**
   For the operating temperature of the equipment, refer to the “1-3. Operating Conditions” in this manual.

6. **When performing the installation, keep the following space away from walls in order to obtain proper exhaust and radiation of heat.**
   Right, Left: 4 cm (1.6 inches) or more
   Rear: 10 cm (4 inches) or more

When using a Ethernet cable:
For safety,do not connect to the connector for peripheral device wiring that might have excessive voltage.

For the customers in Japan

リチウムイオン電池のリサイクルについて

このマークはリチウムイオン電池の
リサイクルマークです。

Li-ion

リチウムイオン電池は，リサイクルできます。
不要になったリチウムイオン電池は，金属部にセロハンテープなどの絶縁テープを貼ってリサイクル協力店へお持ちください。

充電式電池の回収・リサイクルおよびリサイクル協力店については社団法人電池工業会ホームページ
http://www.baj.or.jp/ を参照して下さい。

For the customers in the U.S.A. and Canada

RECYCLING LITHIUM-ION BATTERIES

Lithium-Ion batteries are recyclable.
You can help preserve our environment by returning your used rechargeable batteries to the collection and recycling location nearest you.

For more information regarding recycling of rechargeable batteries, call toll free 1-800-822-8837, or visit http://www.rbrc.org/

Caution: Do not handle damaged or leaking Lithium-Ion batteries.

For the customers in the Netherlands
Voor de klanten in Nederland

Hoe u de batterijen moet verwijderen, leest u in de Onderhoudshandleiding.

Gooi de batterij niet weg maar lever deze in als klein chemisch afval (KCA).

NL

Für Kunden in Deutschland

Entsorgungshinweis: Bitte werfen Sie nur entladene Batterien in die Sammelboxen beim Handel oder den Kommunen. Entladen sind Batterien in der Regel dann, wenn das Gerät abschaltet und signalisiert “Batterie leer” oder nach längerer Gebrauchsdauer der Batterien “nicht mehr einwandfrei funktioniert”. Um sicherzugehen, kleben Sie die Batteriepole z.B. mit einem Klebestreifen ab oder geben Sie die Batterien einzeln in einen Plastikbeutel.

Table of Contents

Manual Structure

Purpose of this manual 2
Related manuals 2
Trademark 2

1. Installation

1-1. Installation Procedure 1-1
1-2. Supplied Accessories 1-1
1-3. Operating Conditions 1-1
1-4. Power Supply 1-2
1-4-1. Voltage and Power Requirements 1-2
1-4-2. Recommeded Power Cord 1-2
1-5. Installation Space 1-3
1-6. Rack Mounting 1-4
1-7. Matching Connectors and Cables 1-9
1-8. Signal Inputs and Outputs 1-10
1-9. Switch Settings on Connector Panel 1-14
1-10. Switch Settings on Circuit Boards 1-15
1-10-1. APR-62 Board 1-15
1-10-2. CUE-13 Board 1-16
1-11. System Setting 1-17
1-12. Opening/Closing the Lower Control Panel 1-19
1-13. Reference System 1-20
1-14. Settings when Editor is Connected 1-21
1-14-1. Settings for Time Code 1-21
1-14-2. VTR Constant Values Settings of Editor 1-21
1-15. Removing/Reattaching Plug-in Board 1-22
1-16. Taking Out the Cassette in Tape Slacking 1-23

Appendix A Setting Check Sheet

Manual Structure

Purpose of this manual

This manual is the installation manual of the HD Digital Videocassette Recorder SRW-5000.

This manual is intended for use by trained system and service engineers, and provides the information that is required to install (environment, connection information, initial setting, etc.) and the setting check sheet.

Related manuals

Besides this “installation manual”, the following manuals are available for this unit. If these manuals are required, please contact your local Sony Sales Office/Service Center.

- **Operation Manual (Supplied with this unit.)**
  This manual is necessary for application and operation (and installation) of this unit.

- **Maintenance Manual (Available on request)**
  Volume 1 : Service Instruction
  Volume 2 : Parts List, Block Diagrams, and Board Layouts
  Volume 3 : Schematic Diagrams
  These manuals describe the maintenace and service information (service overview, adjustments, board layouts, schematic diagrams, detailed parts list, etc.) for this unit.

- **Protocol Manual of Remote (9-pin) Connector (Available on request)**
  This manual explains the protocol for controlling the VTR via the RS-422A (9-pin serial remote).

- **Interface Manual of Parallel I/O (50-pin) Connector (Available on request)**
  This manual explains the protocol for controlling the VTR via the parallel (50-pin).

- **“Semiconductor Pin Assignments” CD-ROM (Available on request)**
  This “Semiconductor Pin Assignments” CD-ROM allows you to search for semiconductors used in this unit.
  Semiconductors that cannot be searched for on this CD-ROM are listed in the maintenance manual (volume 2) for the corresponding unit. The maintenance manual (volume 2) contains a complete list of all semiconductors and their ID Nos., and thus should be used together with the CD-ROM.
  Part number: 9-968-546-XX

Trademark

Registered trademark used in this manual is as follows.

- Ethernet is a registered trademark of Xerox Corporation.

Section 1
Installation

1-1. Installation Procedure

Installation procedure of this unit is shown on the following flowchart.
Refer to each section about detail of each flow.
The operation manual is also required to do ∗-marked flow.

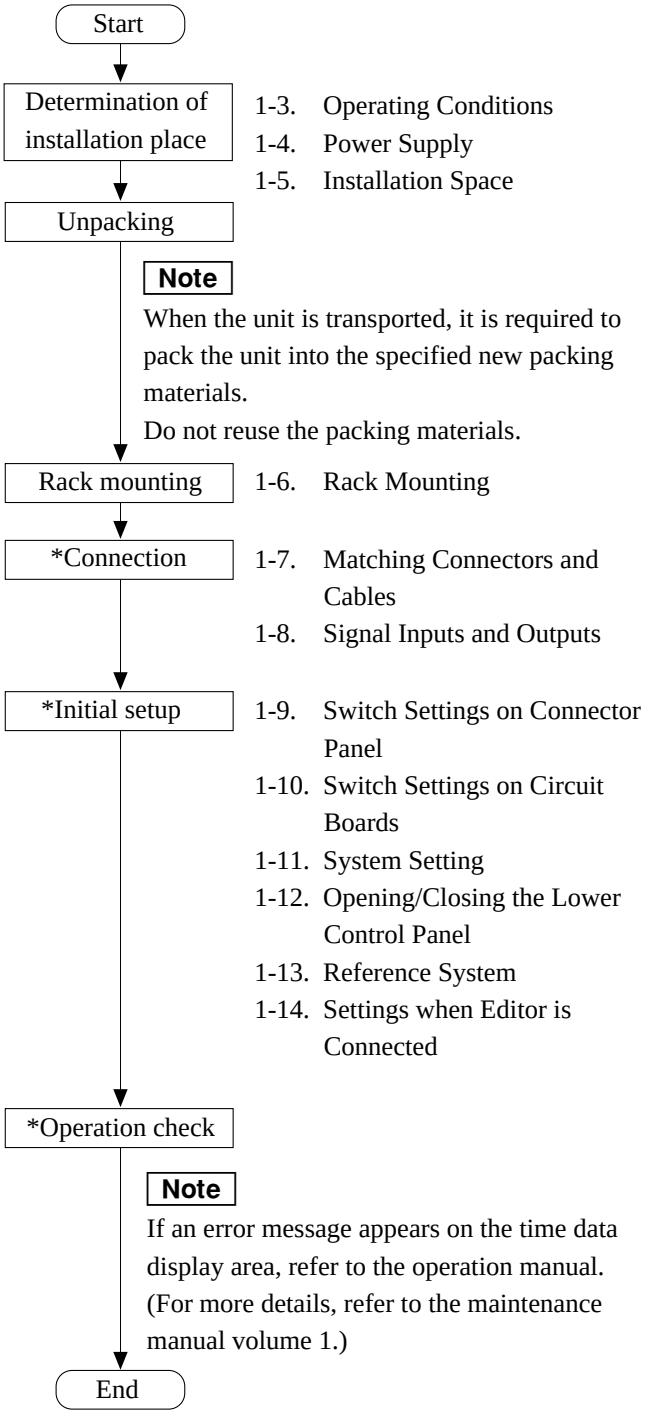

1-2. Supplied Accessories

Operation manual
- Japanese 1
- English 1

Operation manual CD-ROM (PDF) 1

Installation manual
- Japanese 1
- English 1

1-3. Operating Conditions

CAUTION

Good air circulation is essential to prevent internal heat build-up. Place the unit in location with sufficient air circulation.
Do not block the ventilation holes of the cabinet and the front and rear panels.

Operating temperature: 5 °C to 40 °C
Operating humidity: 25 % to 80 % (non-condensing)
Storage temperature: −20 °C to 60 °C
Locations to avoid:
- Areas where the unit will be exposed to direct sunlight of any other strong lights.
- Areas near heat sources.
- Dusty areas or areas subject to vibration.
- Areas with strong magnetic field.
- Areas with much electrical noise.
- Areas with much static electricity.
- Areas that is impossible to find a specified room for installation. (Refer to “1-5. Installation Space”.)
- Areas windtight.

Tilt allowance: Within 30° (Do not slant the front and rear of the unit more than 30°.)

CAUTION

Fix the unit securely to avoid drop when the unit is operated at not-horizontal place.

1-4. Power Supply

1-4-1. Voltage and Power Requirements

This unit's power line has a switching regulator.

CAUTION

Be sure to operate the unit within the range of following power voltage.

Power voltage:	AC 100 to 240 V ±10 %
Power frequency:	50 Hz or 60 Hz
Power consumption:	Maximum 320 W (With all of the presumed optional kits.) **Note** The power consumption becomes the maximum at record-starting.
Rush current:	Power voltage 100 V IN: 17 A Power voltage 240 V IN: 54 A

Note

AC power supply is required a capacity which is commensurate with rush current.
If the capacity of the AC power supply is not enough, the breaker of AC power of a supply side may operate or this unit may not operate normally.

1-4-2. Recommeded Power Cord

This unit does not come with a power cord.
To get a power cord, please contact your local Sony Sales Office/Service Center.

WARNING

- Use the approved Power Cord (3-core mains lead)/ Appliance Connector/Plug with earthing-contacts that conforms to the safety regulations of each country if applicable.
- Use the Power Cord (3-core mains lead)/Appliance Connector/Plug conforming to the proper ratings (Voltage, Ampere).

If you have questions on the use of the above Power Cord/ Appliance Connector/Plug, please contact your local Sony Sales Office/Service Center.

WARNING

- Never use an injured power cord.

For customers in the U.S.A. and Canada:

① Power cord 125 V 10 A (2.4 m): ⚠1-557-377-11
② Plug holder (Brown): 3-613-640-01

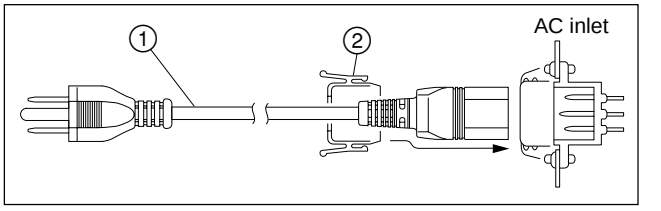

For customers in the United Kingdom:

① Power cord 250 V 10 A (2.4 m): ⚠1-782-165-11
② Plug holder (Brown): 3-613-640-01

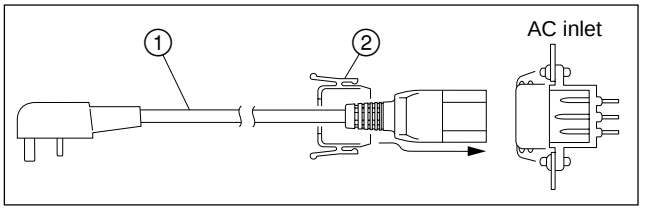

For customers in European countries except the United Kingdom:

① Power cord 250 V 10 A (2.4 m): ⚠1-782-164-11
② Plug holder (Brown): 3-613-640-01

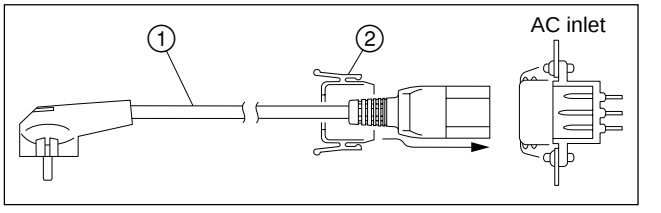

For customers in the China:

① Power cord 250 V 10 A (1.8 m): ⚠1-783-481-11
② Plug holder (Brown): 3-613-640-01

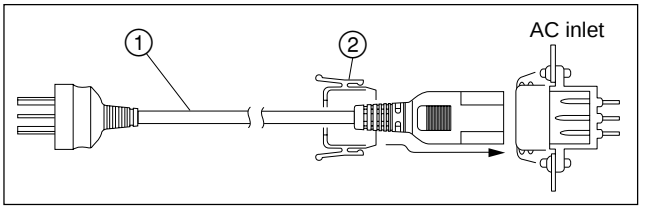

If the unit is used in the area except above, please contact your local Sony Sales Office/Service Center.

1-5. Installation Space

When installing, the installation space must be secured in consideration of the ventilation and service operation.

- Do not block the ventilation slots at the left side and right side panels, and vents of the fans.
- Leave a space around the unit for ventilation.
- Leave more than 40 centimeters of space in the rear of the unit to secure the operation area.

When the unit is installed on the desk or the like, leave at least four centimeters of space in the left and right sides. Leaving 40 centimeters or more of space above the unit is recommended for service operation.

Moreover, an air flow that is effective in cooling the unit is essential. If the ventilation is not enough, the unit may be damaged because of an increase of the internal temperature.

Note

This unit is air-cooled by the fans. The operation with the upper lid is removed affects the air cooling by the fans. Complete the work in a short time as possible when operating the unit for inspection with the upper lid removed. If it takes a long time, blow to the unit by an electric fan to cool the unit.

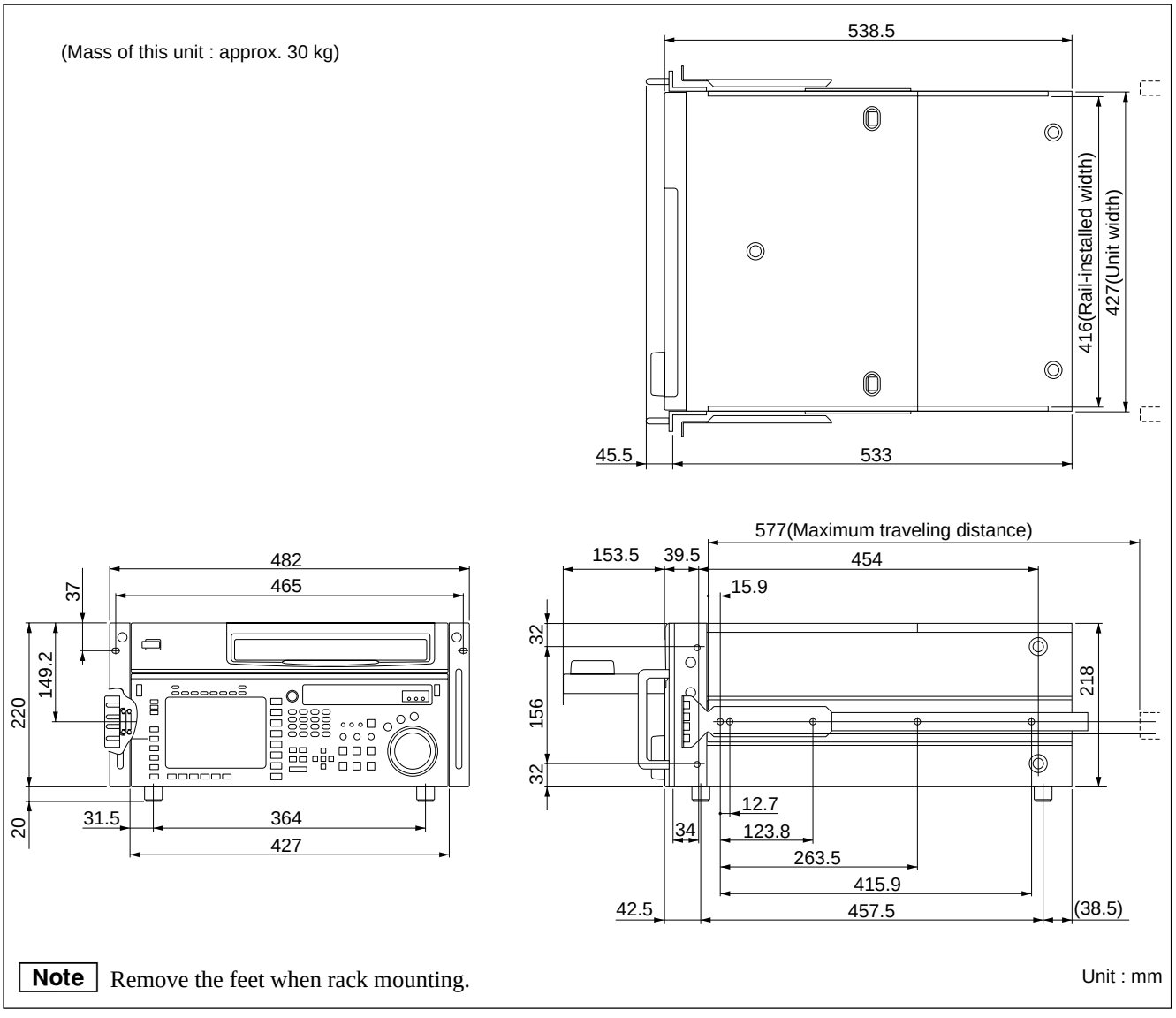

Note Remove the feet when rack mounting.

Dimensions when Rack-Mounting

1-6. Rack Mounting

Explains how to mount this unit into a 19-inch standard rack.
Be sure to mount this unit (*) into a rack accurately following the procedure and notes mentioned below.

WARNING

- To prevent toppling over the rack, fix it on the horizontal and firm floor securely with bolts, etc.
- When installing the unit in an Outside Broadcasting van, be sure to fix the unit to the rack using the screws and ornamental washers supplied with the rack mount kit.

CAUTION

- Use the specified rack mount rail.
  The use of other rail of low strength may drop the unit and cause the risk of injury.
- Mount the unit into a rack with a steady posture.

Notes

- When other equipment with built-in hard disk drive is already mounted in the same rack for mounting this unit, turn off the power of the equipment before mounting this unit.
- Connect long enough cables on the connector panel, considering that the unit is pulled out from the rack.
- Do not operate this unit without the upper lid and bottom plate except when servicing it.
- To reduce an increase in the internal temperature of this unit, keep the following space away from walls.
  Right, Left: 4 cm (1.6 inches) or more
  Rear: 10 cm (4 inches) or more
- Adjust the temperature inside the rack within the range of the unit's operating temperature.
  (Refer to Section 1-3.)

Specified Rack Mount Kit

RMM-110 (Optional accessory) or
RMM-111 (Optional accessory)

The color of rack angle of RMM-110 fits to the unit.
RMM-111 is the same consistency, strength and dimension as RMM-110, but the color of rack angle is different.

Notes

- When mounting this unit into Sony LMS (Library Management System) VTR console, it is necessary to modify the VTR console.
- When mounting this unit into Flexicart, be sure to use the specified kit below.
  VTR Mounting Kit: BKFC-53/2

Parts Packed in RMM-110/111

- Slide rails 2
- Rack angles (handles) 2
- Rail brackets 4
- Plate nuts (large) 4
- Plate nuts (small) 4
- Screws (PSW4 × 16) 4
- Screws (B4 × 8) 8
- Hexagon socket head cap screws 8
- Flat washers 8
- Screws (RK5 × 14) 2
- Ornamental washers 2
- L-shaped hexagon wrench 1

Rack Mounting Procedure

• Removing the feet

1. Set the unit its side panel down.
2. Unscrew the four screws to remove the feet and spacers from the bottom plate of the unit.
3. Set the unit in a horizontal position.

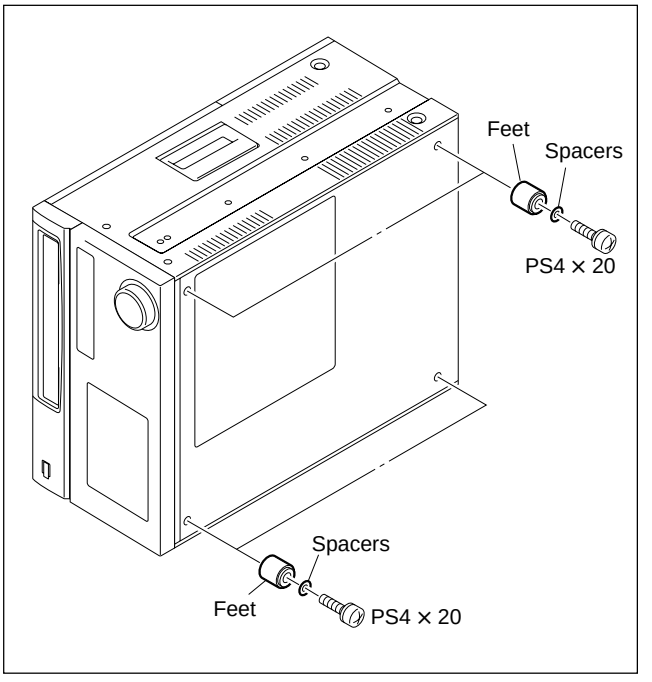

Note

Keep these screws, spacers and the feet.
When operating the unit after demounting it from the rack, be sure to reattach the feet.
Tightening torque: 98×10^{-2} N•m {10 kgf•cm}

• Attaching the inner rails

4. Pull each inner rail from the two intermediate rails.
5. Pull each inner rail out of the intermediate rails while pressing each stopper.

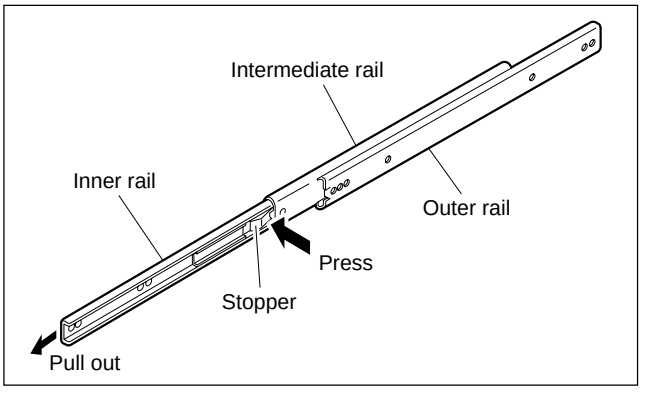

6. Remove the ten screws from both sides (left and right) of the unit as shown in the figure below.
7. Attach the two inner rails to both sides (left and right) of unit with the removed screws in the step 6.
   Tightening torque: 120×10^{-2} N•m {12.2 kgf•cm}

   Notes

   - Be sure to use the (B4 × 6) screws when attaching the inner rail. The use other-sized screws may cause a malfunction.
   - Pay attention not to fasten the screws to the screw holes other than actually used screw holes for fixing the inner rails on both sides of the unit.
     If unnecessary screws are fastened, rack mounting will be unenabled.

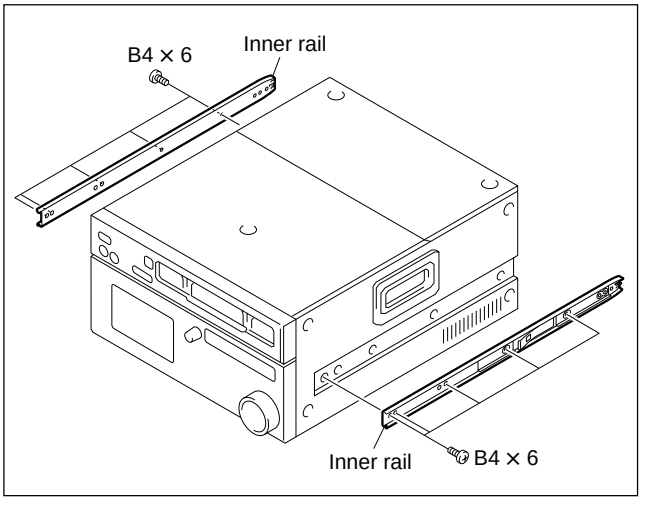

- **Attaching the rack angles (handles)**

8. Remove the four screws from both sides (left and right) of the unit.

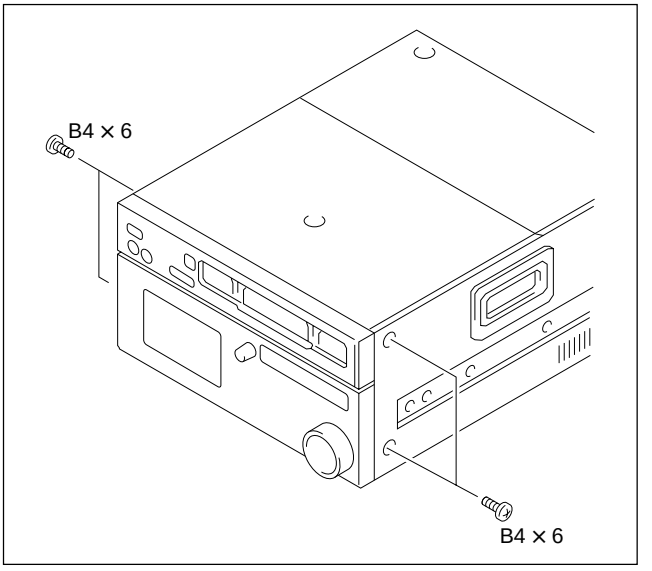

Note

Keep these screws (B4 × 6).
Be sure to use these screws when directly fixing the side panels without the rack angles.
The use of longer screws such as the screws (PSW 4 × 16) for fixing the rack angles will cause a malfunction of the unit.

9. Attach the two rack angles to both sides (left and right) of the unit with the four screws (PSW4 × 16) supplied with the rack mount kit.
Tightening torque: 120×10^{-2} N•m {12.2 kgf•cm}

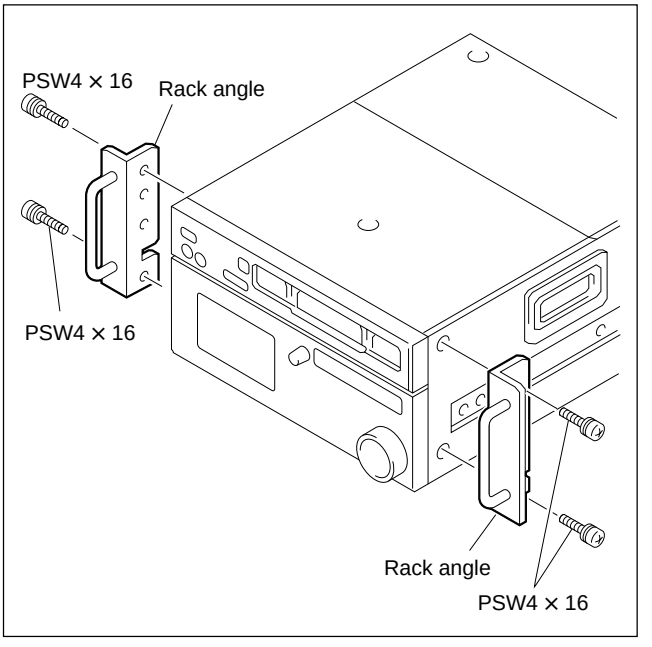

- **Loosely attaching the rail brackets**

10. Slide the intermediate rail as shown in the figure, and then loosely attach the rail bracket to the outer rail with a plate nut (large) and the two screws.

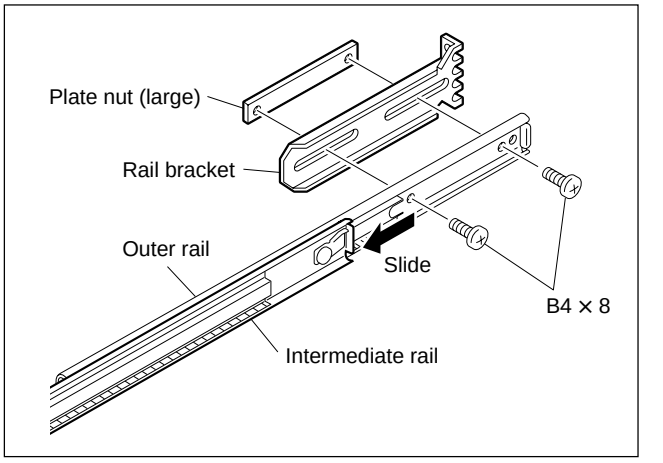

11. Slide the ball retainer in the direction of the arrow, and then loosely attach the rail bracket to the outer rail with a plate nut (large) and the two screws.

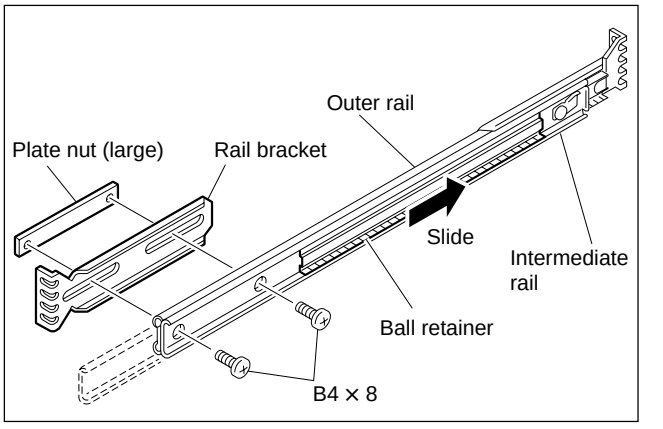

- **Attaching the outer rails**

12. Loosely attach the two outer rails to the middle of the 5U space in the rack for mounting this unit, with the eight hexagon socket head cap screws, eight flat washers, and four plate nuts (small).

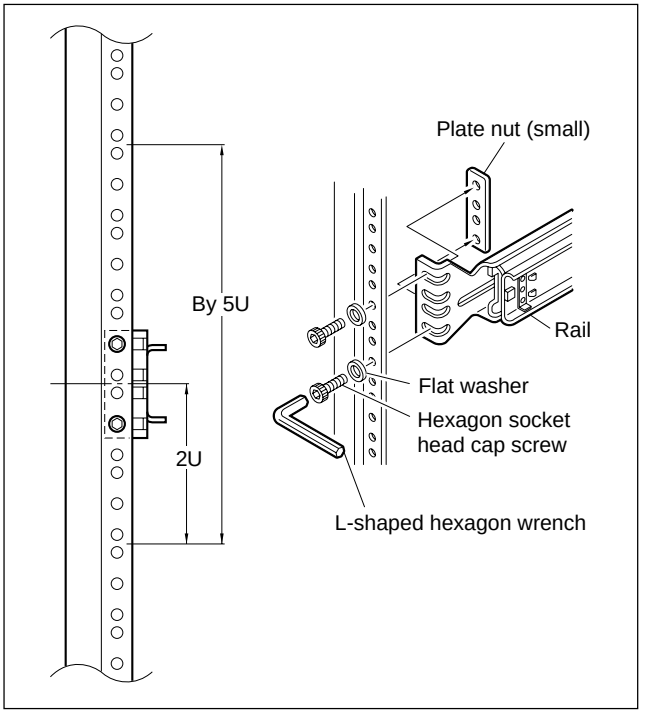

13. Check that the two intermediate rails attached to the rack are parallel.

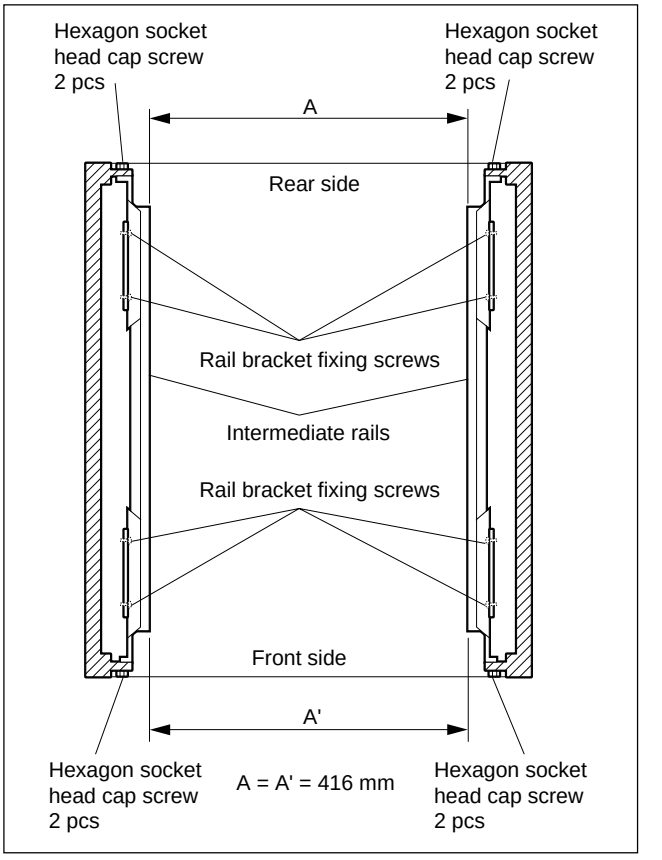

14. As shown in the following figure, adjust each front-side position of the outer rails on both sides (left and right) so that the distance from the surface of the rack to the tip of the rail becomes within the range of 50 to 55 millimeters.
15. To fix the four rail brackets, fully tighten the eight loosely fitted rail bracket fixing screws (B4 × 8) in steps 11 and 12.
    Tightening torque: 120×10^{-2} N•m {12.2 kgf•cm}

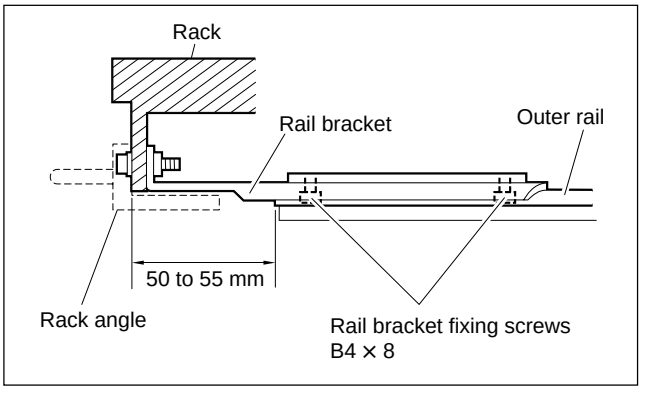

16. To fix the two outer rails to the rack, fully tighten the eight loosely fitted hexagon socket head cap screws in step 12 using the L-shaped hexagon wrench.

• **Mounting in rack**

CAUTION

Be sure to carry the unit by the two persons or more.

17. Set each ball retainer to the position as shown in the figure in the direction of the arrow.

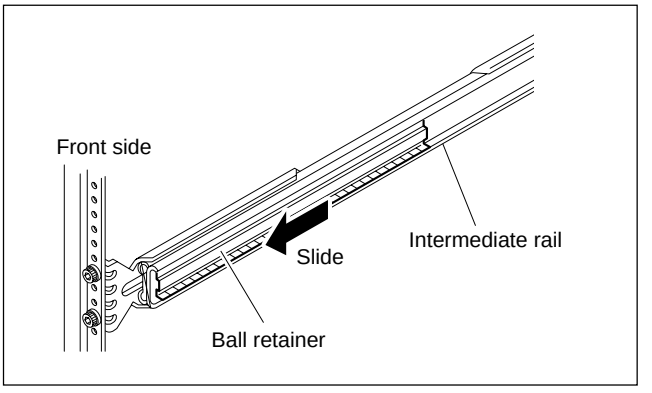

18. Pull equal length of each rail on both sides out.
19. Lift the unit holding the gripes on both sides, slowly insert the inner rails into the intermediate rails.
20. While pressing each stopper of inner rails on both sides, slowly push the unit into the rack.

    CAUTION

    Be careful not to catch your finger or hand in rack mount rail.

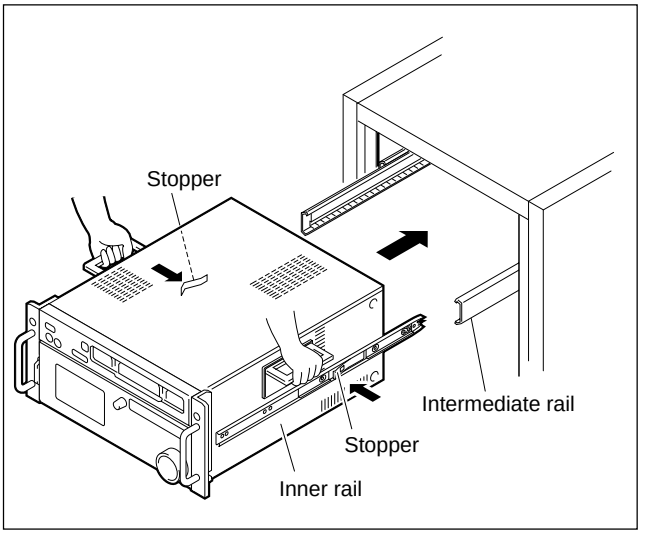

21. Slide the unit in and out from the rack about three times and check that the slide rails move smoothly.
    If they are not smoothly, demount the unit and go back to “Attaching the outer rails” (step 12).

    CAUTION

    When demounting the unit, carry it by the two persons or more.

    Note

    This unit does not have the feet at this operating.
    Put down the unit on the floor or other, being careful not to damage the unit.

22. Push the unit in the depths of the rack. The unit is fixed to the rack by the lock mechanism.
    Attempt to pull the rack angles and confirm that the unit cannot be pulled out of the rack.
23. Secure the unit to the rack with the four screws (RK5 × 14) and four ornamental washers.
    Tightening torque: 120×10^{-2} N•m {12.2 kgf•cm}

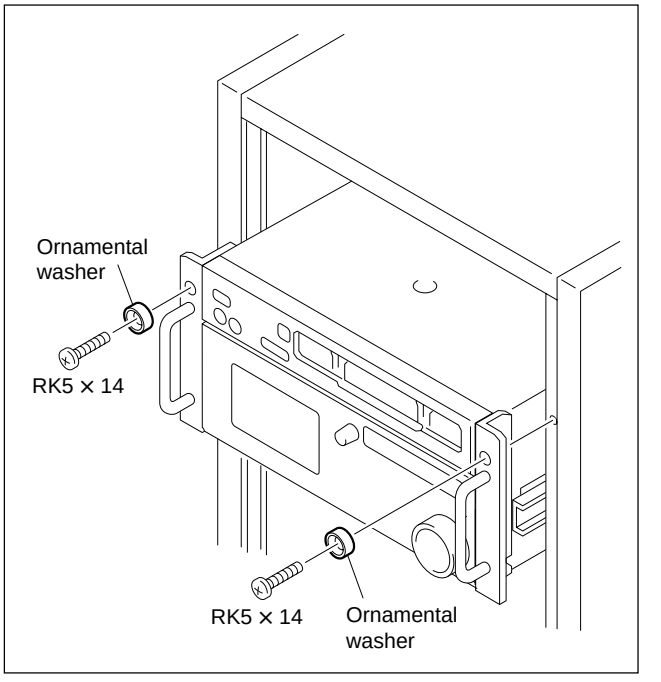

1-7. Matching Connectors and Cables

When external cables are connected to the connector of this unit, the hardware listed below (or equivalents) must be used.

Panel indication	Matching connector (cable)	Sony part No.	Remarks
TIME CODE IN	XLR 3P, MALE	1-508-084-00	
AUDIO OUTPUT CUE OUT MONITOR OUTPUT TIME CODE OUT	XLR 3P, FEMALE	1-508-083-00	
REF. INPUT HD REF. OUT SD OUT	BNC 75Ω, MALE	1-569-370-12	
AUDIO INPUT (AES/EBU) AUDIO OUTPUT (AES/EBU)	BNC 75Ω, MALE (∗1)	1-569-370-12	
REMOTE 2 PARALLEL I/O (50P)	D-SUB 50P, MALE and JUNCTION SHELL 50P	1-565-516-11 1-563-379-11	
REMOTE 1-IN (9P) REMOTE 1-I/O (9P)	9P remote control cable (RCC-G series) or D-SUB 9P, MALE and JUNCTION SHEEL 9P	– or 1-560-651-00 1-561-749-00	
RS232C	D-SUB 9P, FEMALE	1-563-815-21	
VIDEO CONTROL (9P)	D-SUB 9P, MALE and JUNCTION SHELL 9P	1-561-651-00 1-561-749-00	
HD SDI INPUT HD SDI OUTPUT FORMAT CONV. OUT (OPTION)	BNC 75Ω, MALE (∗2)	1-569-370-12	
SD SDI OUT	BNC 75Ω, MALE (∗3)	1-569-370-12	
PHONES	JM-60 stereo phone plug	–	Upper control panel
ETHERNET	Separately available		
USB	Separately available		

∗1: Coaxial cable length : max. 600 meters (Reference value based on this unit)
It is recommended to connect the BELDEN 8281 cable or equivalent to this connector.

∗2: Coaxial cable length : max. 100 meters (Reference value based on this unit)
It is recommended to connect the BELDEN 1694A cable or equivalent to this connector.

∗3: Coaxial cable length : max. 200 meters (Reference value based on this unit)
It is recommended to connect the BELDEN 8281 cable or equivalent to this connector.

1-8. Signal Inputs and Outputs

〈 **Reduced drawing of rear panel** 〉

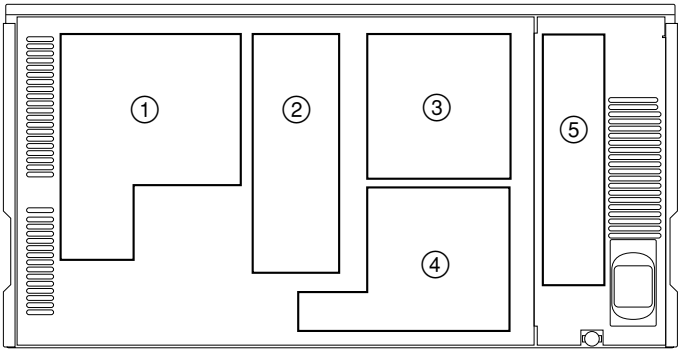

Input connectors

① TIME CODE IN	XLR 3-pin × 1 Time code 0.5 to 18 V p-p, 10 kΩ, balanced
② REF. INPUT 1 REF. INPUT 2 (OPTION)	BNC × 4 (Loop through output × 2) External reference video signal HD : 0.6 V p-p, 75 Ω, sync negative (HD analog tri-level sync) SD : 0.3 V p-p, 75 Ω, sync negative (Black burst or composite sync)
③ AUDIO INPUT (AES/EBU)	BNC × 6 (1 set : CH1/2, CH3/4, CH5/6, CH7/8, CH9/10, and CH11/12) AES/EBU digital audio Complies with SMPTE 299M, SMPTE 276 (AES-3id-1995)
⑤ HD SDI INPUT A	BNC × 1 (outputs the input monitor × 1) Serial digital interface (1.485 Gbit/s), complies with SMPTE 292M, SMPTE 372M
⑤ HD SDI INPUT B (OPTION) (Option HKSR-5003)	BNC × 1 (outputs the input monitor × 1) Serial digital interface (1.485 Gbit/s), complies with SMPTE 292M, SMPTE 372M

Remote connectors

④ REMOTE 2 PARALLEL I/O (50P)*	D-SUB 50P connector
④ REMOTE1-IN (9P)	D-SUB 9P connector (RS-422A interface), Remote control
④ REMOTE1-I/O (9P)	D-SUB 9P connector (RS-422A interface), Remote control
④ RS232C	D-SUB 9P connector (RS-232C interface) for ISR (Interactive Status Reporting)
④ VIDEO CONTROL (9P)	D-SUB 9P connector for a HD digital video controller (HKDV-900) connection
④ ETHERNET	RJ-45 modular jack Complied with 10BASE-T/100BASE-TX
④ USB	USB series B Complied with USB standard Ver 1.1

∗ : Refer to Optional “Interface manual” for details.

Output connectors

① AUDIO OUTPUT	XLR 3-pin × 4 (1 set : CH1, CH2, CH3, and CH4) Analog audio +4 dBm (Standard) (600 Ω load), low impedance, balanced
① CUE OUT	XLR 3-pin × 1 Analog audio +4 dBm (Standard) (600 Ω load), low impedance, balanced
① TIME CODE OUT	XLR 3-pin × 1 Time code 2.2 V p-p, low impedance, balanced
① MONITOR OUTPUT	XLR 3-pin × 2 (1 set : L and R) Analog audio +4 dBm (Standard) (600 Ω load), low impedance, balanced
② HD REF. OUT	BNC × 2 0.6 V p-p, 75 Ω, sync negative (HD analog tri-level sync)
② SD OUT COMPOSITE (MONITOR)	BNC × 1 (for character superimpose) Analog composite video VBS : 1.0 V p-p, 75 Ω, sync negative
② SD OUT SYNC	BNC × 1 SYNC (NTSC/PAL) : 0.286/0.3 V p-p, 75 Ω, sync negative BURST (NTSC/PAL) : 0.286/0.3 V p-p, 75 Ω, sync negative
③ AUDIO OUTPUT (AES/EBU)	BNC × 6 (1 set : CH1/2, CH3/4, CH5/6, CH7/8, CH9/10, and CH11/12) AES/EBU digital audio Complies with SMPTE 299M, SMPTE 276M (AES-3id-1995)
⑤ HD SDI OUTPUT A	BNC × 3 (including 1 for character superimpose) Serial digital interface (1.485 Gbit/s), complies with SMPTE 292M, SMPTE 372M
⑤ HD SDI OUTPUT B (OPTION) (Option HKSR-5003)	BNC × 3 (including 1 for character superimpose) Serial digital interface (1.485 Gbit/s), complies with SMPTE 292M, SMPTE 372M
⑤ SD SDI OUTPUT	BNC × 3 (including 1 for character superimpose) Serial digital interface (270 Mbit/s), complies with SMPTE 259M, ITU-R BT.656
⑤ FORMAT CONV. OUT (OPTION) (Option HKSR-5001)	BNC × 2 (for character superimpose) Serial digital interface (1.485 Gbit/s), complies with SMPTE 292M
PHONES (Upper control panel)	JM-60 stereo phone jack Analog audio up to −12 dBu (8 Ω load), unbalanced

Other

Memory stick (Lower control panel)	Memory stick × 1 Applicable memory stick : 8 MB to 128 MB **Note** The memory card (PCMCIA type) can be used by removing the memory stick adaptor under the lower control panel. For removing the memory stick adaptor, refer to the maintenance manual volume 1.

REMOTE 2 PARALLEL I/O: 50-pin (female)

〈External view〉

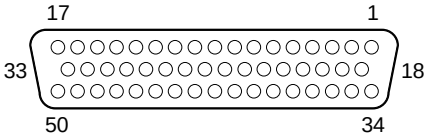

Pin No.	I/O *1	Setting change *2	Signal	Description
1	IN	○	FF	CLOSURE SW (FF)
2	OUT	×	REC SW	PANEL REC SW OUT
3	OUT	×	PLAY SW	PANEL PLAY SW OUT
4	OUT	×	STOP SW	PANEL STOP SW OUT
5	OUT	×	ENTRY SW	PANEL ENTRY SW OUT
6	OUT	×	REF SYSTEM ALARM	Non-REFERENCE
7	OUT	×	CF LOCK	COLOR FRAME LOCK STATUS
8	OUT	×	DRUM LOCK	LOCK STATUS OF DRUM SERVO
9	OUT	×	CAP LOCK	LOCK STATUS OF CAPSTAN SERVO
10	OUT	○	CUE PRESET	EDIT PRESET STATUS of the CUE Channel
11	OUT	○	TC PRESET	EDIT PRESET STATUS of the TC Channel
12	OUT	○	OXIDE/METAL	OXIDE/METAL TAPE STATUS
13	OUT	○	TAPE THICKNESS	TAPE THICKNESS STATUS
14	OUT	×	SPARE	SPARE
15	OUT	×	SPARE	SPARE
16	——	——	+12V	(Maximum output current 50 mA)
17	——	——	GND	SIGNAL GND
18	IN	○	PREROLL	CLOSURE SW (PREROLL)
19	IN	○	STBY ON	CLOSURE SW (STANDBY ON)
20	IN	○	REW	CLOSURE SW (REW)
21	IN	○	ENTRY	CLOSURE SW (ENTRY IN)
22	IN	○	STBY OFF	CLOSURE SW (STANDBY OFF)
23	IN	○	EJECT	CLOSURE SW (EJECT)
24	OUT	×	REC	REC STATUS
25	OUT	×	CH CONDITION RED	CHANNEL CONDITION RED STATUS
26	OUT	○	ASSEMBLE PRESET	ASSEMBLE PRESET STATUS
27	OUT	○	EDIT OUT	EDIT STATUS
28	OUT	○	EJECT OUT	EJECT STATUS
29	OUT	○	ANALOG/DIGITAL	ANALOG/DIGITAL STATUS
30	OUT	○	REEL HUB	REEL HUB STATUS
31	OUT	×	REM2 SETTING DATA RESET	REMOTE2 SETTING DATA RESET STATUS
32	OUT	×	ALL REC INHIBIT	ALL REC INHIBIT STATUS
33	——	——	GND	
34	IN	○	PLAY	CLOSURE SW (PLAY)
35	IN	○	STOP	CLOSURE SW (STOP)

(Continue)

(Continued)

Pin No.	I/O *1	Setting change *2	Signal	Description
36	IN	○	REC	CLOSURE SW (REC)
37	OUT	×	REV LAMP	REV LAMP STATUS
38	OUT	○	DA2 PRESET	DA2 EDIT PRESET STATUS
39	OUT	○	DA1 PRESET	DA1 EDIT PRESET STATUS
40	OUT	×	FWD LAMP	FWD LAMP STATUS
41	OUT	○	DA4 PRESET	DA4 EDIT PRESET STATUS
42	OUT	○	DA3 PRESET	DA3 EDIT PRESET STATUS
43	OUT	×	STOP	STOP STATUS
44	OUT	○	VIDEO PRESET	VIDEO EDIT PRESET STATUS
45	OUT	○	INSERT PRESET	INSERT EDIT PRESET STATUS
46	OUT	×	STBY ON	STANDBY ON STATUS
47	OUT	×	PLAY	PLAY STATUS
48	OUT	×	REMOTE	REMOTE STATUS
49	OUT	×	ALARM	SYSTEM ALARM STATUS
50	OUT	○	PREROLL	PREROLL STATUS

*1: Input ; 47 kΩ pull up to +5 V (close/open)
Output ; 10 kΩ pull up to +5 V (0 V or open)
*2: The pins described as ○ mark are possible to change the setting.
Refer to the optional interface manual for changing the setting.

REMOTE 1-IN: 9-pin (female)
REMOTE 1-I/O: 9-pin (female)

〈External view〉

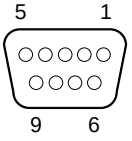

Pin No.	Signal
1	GND
2	RM TX(–)
3	RM RX(+)
4	GND
5	PRIORITY
6	GND
7	RM TX(+)
8	RM RX(–)
9	GND

RS232C: 9-pin (male)

〈External view〉

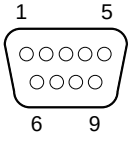

Pin No.	Signal
1	DCD ; Data Carrier Detect (Input)
2	RXD ; Received Data (Input)
3	TXD ; Transmitted Data (Output)
4	DTR ; Data Terminal Ready (Output)
5	SG ; Signal Ground
6	DSR ; Data Set Ready (Input)
7	RTS ; Request to Send (Output)
8	CTS ; Clear to Send (Input)
9	NC

VIDEO CONTROL: 9-pin (female)

〈External view〉

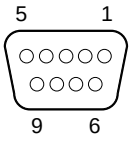

Pin No.	Signal
1	GND
2	RM TX (–)
3	RM RX (+)
4	GND
5	——
6	GND
7	RM TX (+)
8	RM RX (–)
9	GND

ETHERNET: RJ-45 modular jack

Standard : Complied with IEEE 802.3u (100BASE-TX)
and IEEE 802.3 (10BASE-T)

〈External view〉

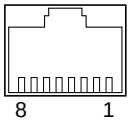

Pin No.	I/O	Signal
1	O	TXD (+)
2	O	TXD (–)
3	I	RXD (+)
4	—	NC
5	—	NC
6	I	RXD (–)
7	—	NC
8	—	NC

USB: USB series B

Standard : USB standard Ver1.1

〈External view〉

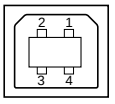

Pin No.	I/O	Signal
1	–	Vcc (+5 V)
2	I/O	DATA (–)
3	I/O	DATA (+)
4	–	GND

1-9. Switch Settings on Connector Panel

When the unit is installed, be sure to perform the following setup.
Refer to the operation manual “Section 2 Location and Function of Parts” for setup.

- 75 Ω termination switch of reference video input

1-10. Switch Settings on Circuit Boards

1-10-1. APR-62 Board

If necessary, perform the following audio-related settings using the switches on the APR-62 board.

- Analog audio output level/output headroom
- Monitor output level/output headroom

Note

Refer to Section 1-15 for removing and reattaching the plug-in boards.

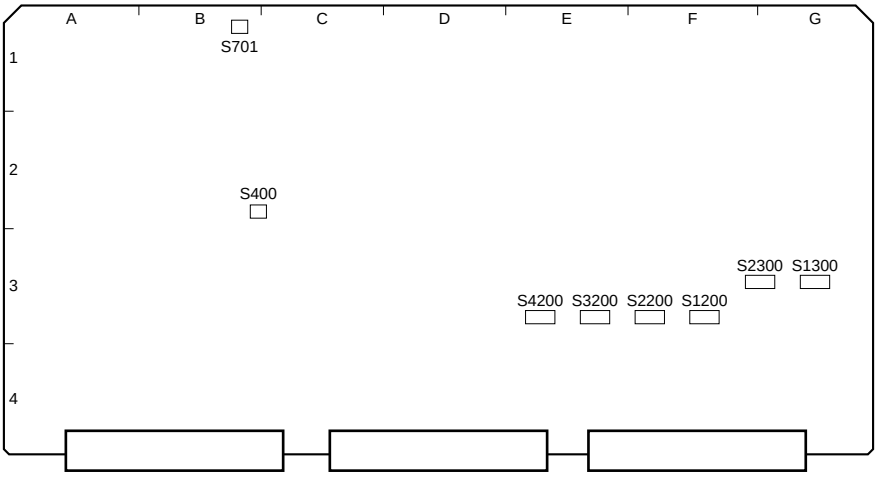

APR-62 Board (Side A)

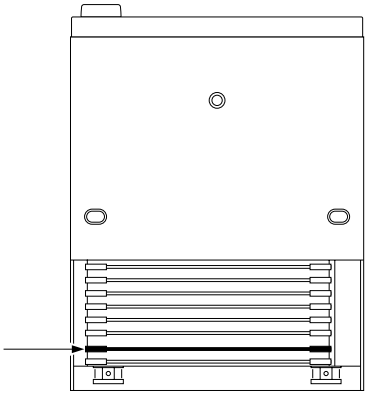

< Top View >

Analog audio and Monitor output level/output headroom settings

Channel	Ref. No.	Switches state (■ : Knob position)			
		Output level (600 Ω)/Output headroom			
CH1	S1200	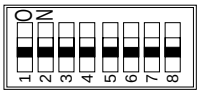	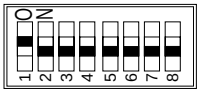	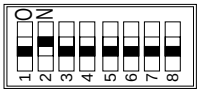	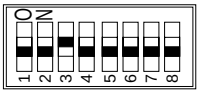
CH2	S2200				
CH3	S3200				
CH4	S4200	+4 dBm/–20 dBm (Factory setting)	–3 dBm/–18 dBm	+1 dBm/–18 dBm	0 dBm/–18 dBm
R	S1300				
L	S2300	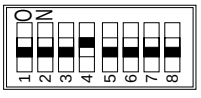	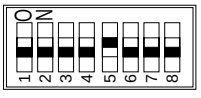	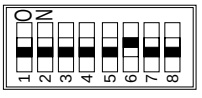	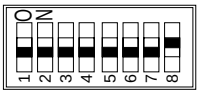
		0 dBm/–12 dBm	+4 dBm/–18 dBm	+4 dBm/–16 dBm	+6 dBm/–20 dBm

1-10-2. CUE-13 Board

If necessary, perform the following audio-related settings using the switches on the CUE-13 board.

- CUE output level

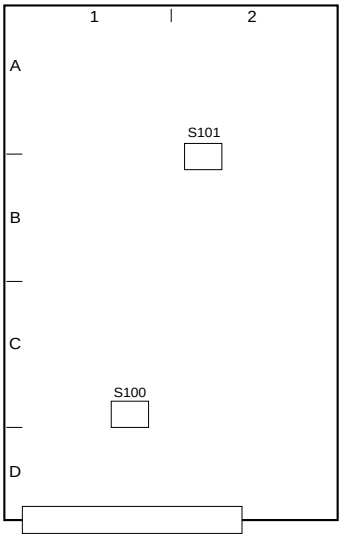

CUE-13 Board (Side A)

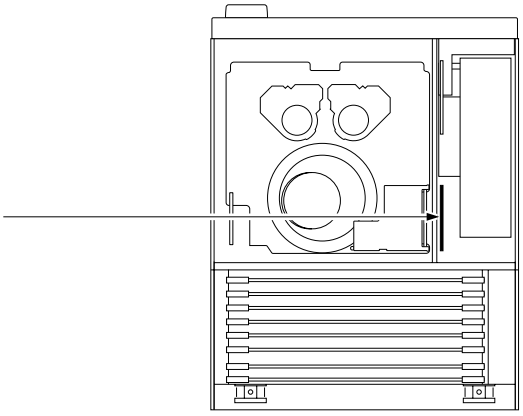

< Top View >

CUE output level settings

Ref. No.	Switches state (■ : Knob position)			
S101	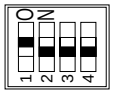	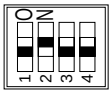	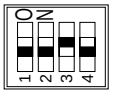	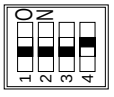
	+4 dBm/600 Ω (Factory setting)	0 dBm/600 Ω	–3 dBm/600 Ω	–20 dBm/600 Ω

1-11. System Setting

Note

The function assigned to each of function keys (F1 to F9) discribed in this section is initial status.

1. Activating the system menu

(1) Turn on the power.
(2) Press the DIAG button while pressing the SFT (SHIFT) key.
(3) Press the F8 (MAINTE EXEC) key while pressing the SFT (SHIFT) key.
(4) Press the F9 (OTHERS CHECK) key.
(5) Press the F9 (SYSTEM MENU) key to display the system menu.

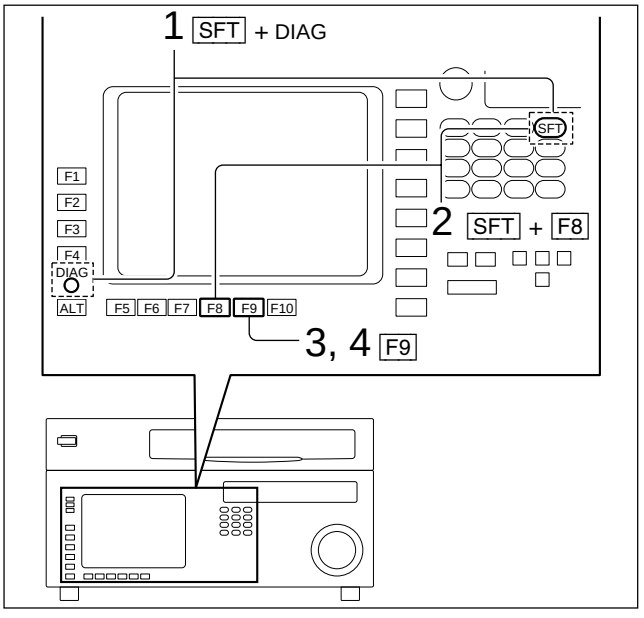

2. Setting the system

Set the system referring to the table 1-11-1 below.

Note

The selectable systems differ according to the VTR settings (operation mode) or option boards.
The unselectable system setting items are shaded.

(1) Press the F4 (SYSTEM SIGNAL) key several times for setting to the 4:2:2 or 4:4:4.

Note

The 4:4:4 can be selected when the option HKSR-5003 is installed.

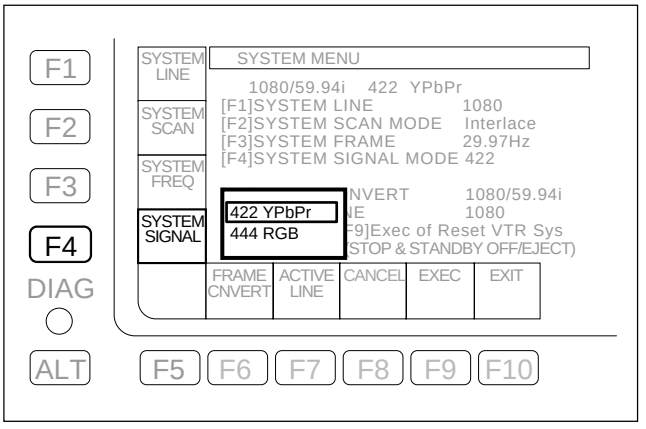

Table 1-11-1. Compatibility of REC and PB

System setting (Operation mode)				Tape format which can be played back.								
SYSTEM SIGNAL	SYSTEM LINE	SYSTEM SCAN	SYSTEM (FRAME) FREQ [Hz]	Digital BETACAM		HDCAM		HDCAM SR				
				Interlace (HKSR-5002)		1080 4:2:2		1080 4:2:2		720 4:2:2	1080 4:4:4 (HKSR-5003)	
				NTSC	PAL	PsF	Interlace	PsF	Interlace	Progressive	PsF	Interlace
4:2:2 (YPbPr)	1080	PsF	23.976									
			24									
			25		○ ∗1	○ ∗2 ∗3	○ ∗2	○	○ ∗3			
			29.97	○ ∗1								
			30									
		Interlace	50		○							
			59.94	○		○ ∗2	○ ∗2 ∗3	○ ∗3	○			
			60									
	720	Progressive	59.94, 60							○		
4:4:4 (RGB) (HKSR-5003)	1080	PsF	23.976, 24, 25, 29.97, 30								○	○ ∗3
		Interlace	50, 59.94, 60								○ ∗3	○

∗1 : The HD SDI output signal is converted to PsF.
∗2 : If the signal is played back at a different system frequency from REC, the audio may be muted.
∗3 : The video output signal is converted to the system scanning method selected by the system of this unit.

(2) Press the F1 (SYSTEM LINE) key several times for setting to the 1080 × 1920 or 720 × 1280.

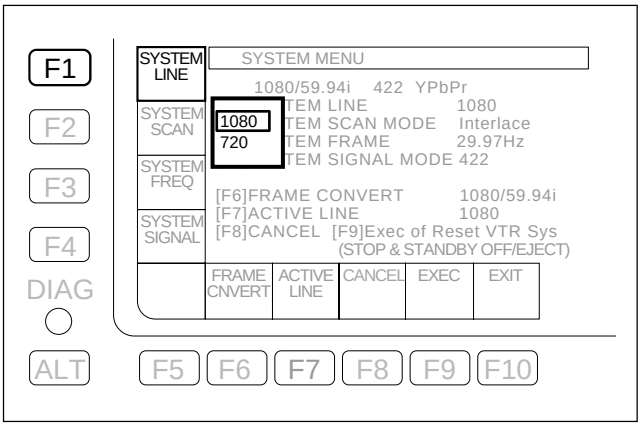

(3) Press the F2 (SYSTEM SCAN) key several times for setting to the Interlace, Progressive or PsF (Progressive Segmented Frame).

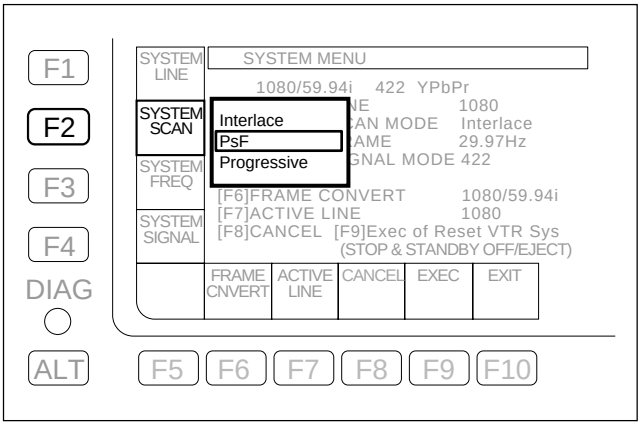

(4) Press the F3 (SYSTEM FREQ) key several times to set the frame rate.

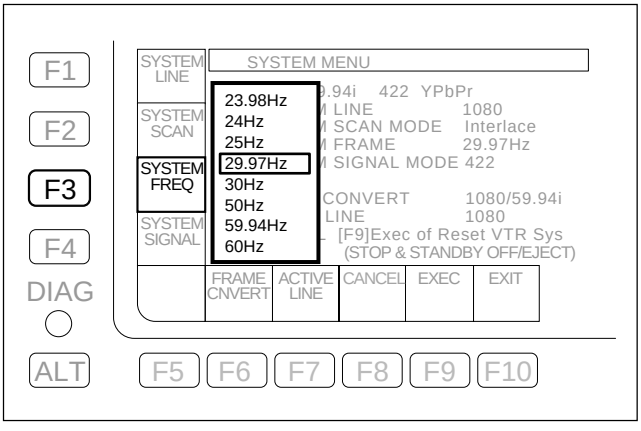

(5) Press the F6 (FRAME CONVERT) key several times to set the image format of the format converter output.

Note

This item can be set when the option HKSR-5001 is installed.

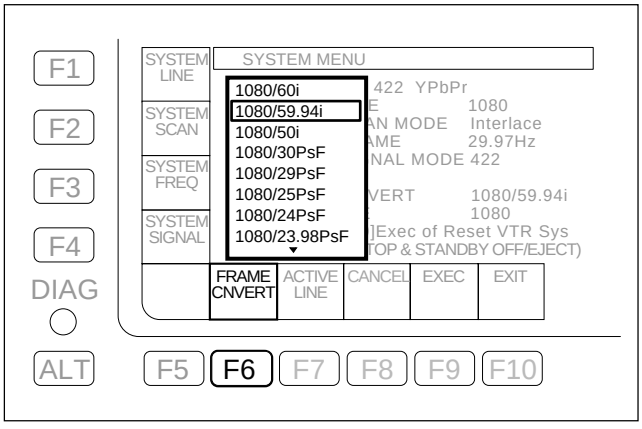

(6) Press the F7 (ACTIVE LINE) key several times for setting the active line to 1080 or 1035.

Note

This becomes effective only when the VTR is set to 4:2:2 1080 × 1920 Interlace 29.97 or 30 frames.

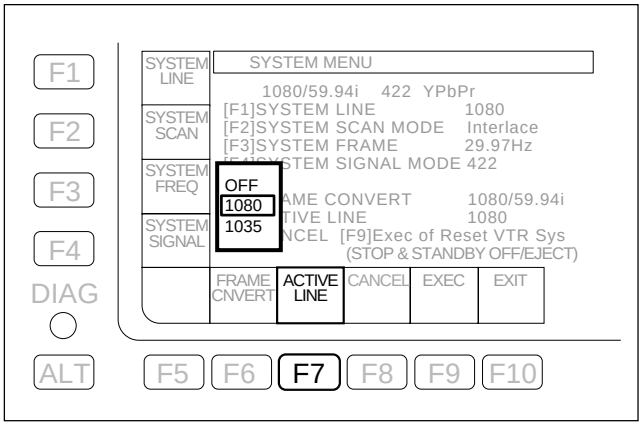

3. Store the settings

(1) Press the F9 (EXEC) key.

- The message “Are You Sure?” is displayed.

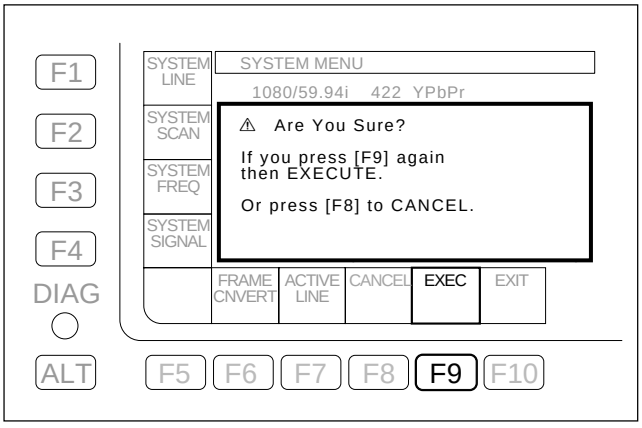

(2) Press the F9 (EXEC) key again.

- The message “SYSTEM REBOOTING.....” is displayed.
- On completing the store of the settings, the system is restarted automatically.

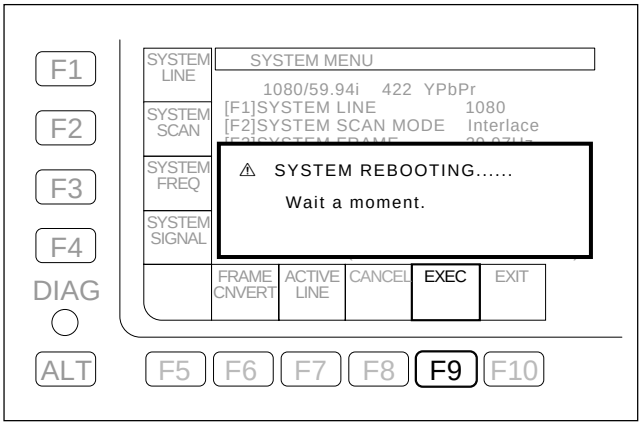

(3) Check that the system is restarted, and turn OFF the POWER switch and turn ON again.

1-12. Opening/Closing the Lower Control Panel

Open the Lower Control Panel

1. After pressing the unlock button, open the lower control panel in the arrow direction.

   Note

   The inclination of the lower control panel can be adjusted to five steps (about 18° each time) between vertical and horizontal.

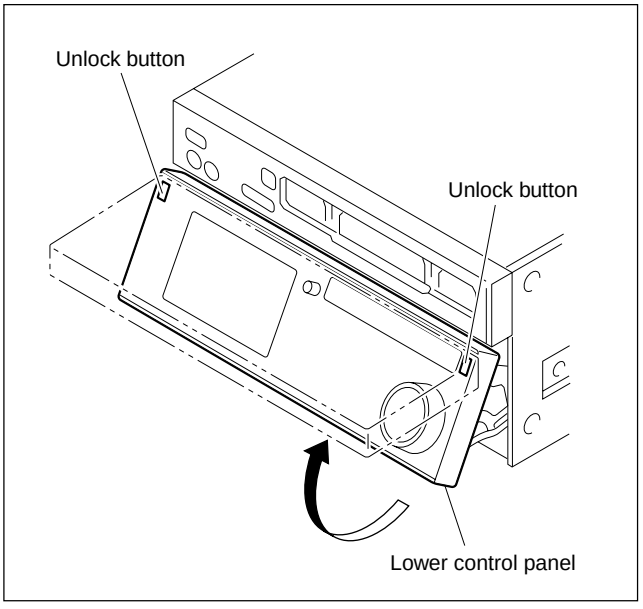

Close the Lower Control Panel

While lifting the outer stay by the forefinger, close the lower control panel as shown in the figure.

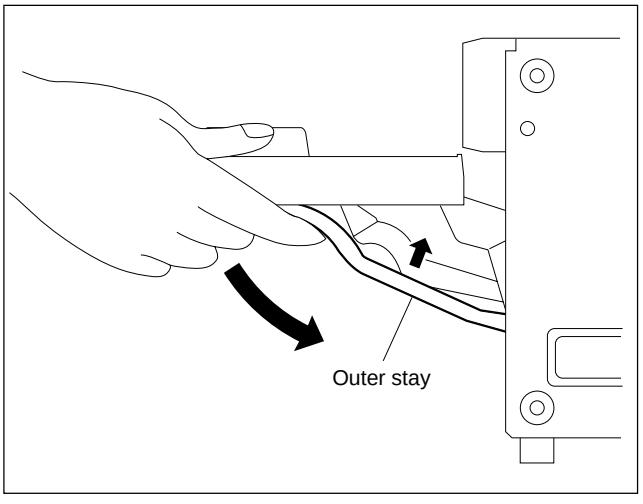

1-13. Reference System

For each reference signal of this unit, either of an external reference video signal from the REF. INPUT connector or input video signal from the HD SDI INPUT A connector is automatically selected according to the setting of setup menu ITEM-005, and the operation mode (PB/EDIT/REC) of this unit. (Refer to the table 1-13-1 below.)

Note

When the setup menu ITEM-005 is set to “enternal”, be sure to input the external reference video signal to the REF. INPUT connector.
The record might not be correctly done.

Alarm Display for Video Input Signal and Reference Signal

Blink of the STOP button

The button blinks when the reference signal is not locked to an input video signal.
(This function can be canceled in the setup menu ITEM-102.)

- When the setup menu ITEM-005 is set to “input”:
  The STOP button blinks when the signal is not input to the HD SDI INPUT A connector.
- When the setup menu ITEM-005 is set to “external”:
  The STOP button blinks in the following either cases.
  When no reference signal is input to REF. INPUT connector.
  When the reference video signal (REF. INPUT) is not synchronized with an input signal from the HD SDI INPUT A connector.
- When the setup menu ITEM-005 is set to “auto”:
  The STOP button blinks in the following either cases.
  No signal is input to the HD SDI INPUT A connector when the REC/EDIT mode.
  No reference signal is input to REF. INPUT connector when the PB mode.

Table 1-13-1. Reference System

ITEM-005 setting	external	auto			input
Operation mode	PB/EDIT/REC	PB	EDIT	REC	PB/EDIT/REC
Selected reference signal	REF. INPUT		HD SDI INPUT A		

1-14. Settings when Editor is Connected

1-14-1. Settings for Time Code

To set the TIME CODE, use the TC menu in the function menu.
Set the TIME CODE as follows when the editor or the VTR with edit function is connected.

Button	Item	Setting
F6	REGENE SOURCE	int-L
F7	TCG MODE	preset
F8	RUN MODE	free

1-14-2. VTR Constant Values Settings of Editor

Set the VTR constant values according to the table 1-14-2 below when the editor which needs the setting of VTR constant values is connected.

Table 1-14-2. VTR Constant Values Settings of Editor

Frame rate	VTR CONSTANT 1								VTR CONSTANT 2							
	Data No.								Data No.							
	1	2	3	4	5	6	7	8	1	2	3	4	5	6	7	8
59.94, 29.97P	E0	00	00	96	07	07	03	8A	0D	08	00	00	80	3D	FF	5A
50, 25P	E1	00	00	7D	07	07	03	8A	0D	07	00	00	80	3B	FF	4B
24P, 23.98P	E2	00	00	78	07	07	03	8A	0D	07	00	00	80	3B	FF	4B

(Standard value is expressed in hexadecimal.)

1-15. Removing/Reattaching Plug-in Board

Notes

- Turn off the power and unplug the power cord before removing/reattaching the board.
- When the plug-in board is replaced, refer to the maintenance manual, volume 1.

Removing

1. Fully loosen the fixing screw.
2. Slide the knobs on upper lid (front) assembly each in the inside. (Move the knobs to the outside to fix the upper lid (front) assembly.
3. Remove the upper lid (front) assembly.

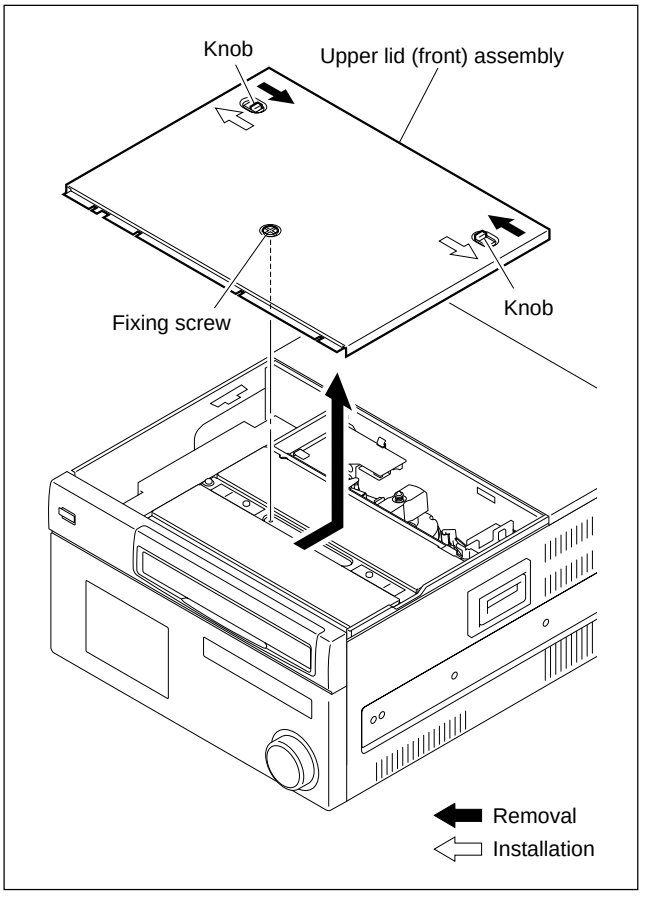

4. Fully loosen the two fixing screws.
5. Remove the upper lid (rear) assembly by moving in the direction indicated by the arrow.

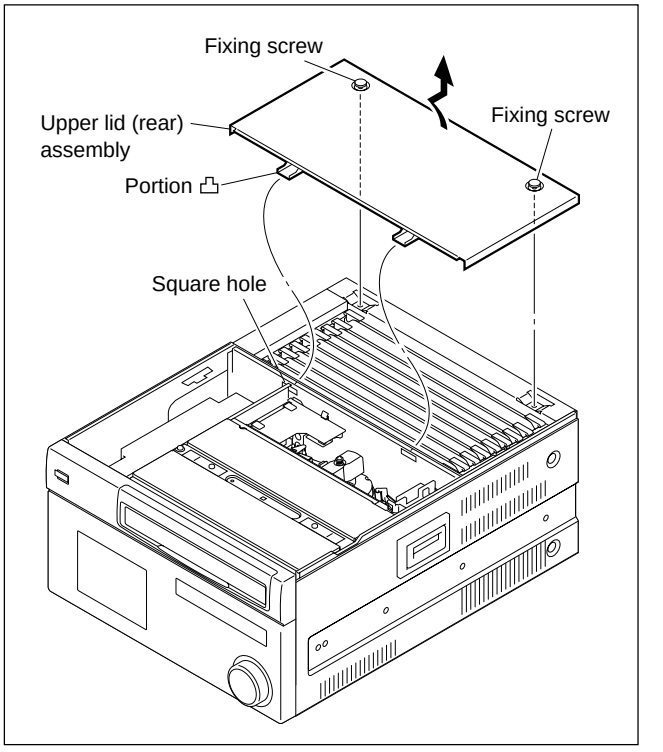

6. Open the eject levers on both ends of the board in the direction of the arrows.
7. Hold the eject levers and slowly pull the board out.

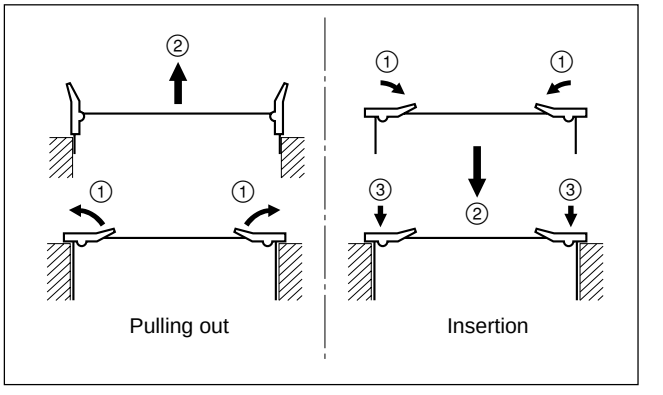

Reattaching

When reattaching the board, install in the reverse order of removal.

Notes

- After inserting the board, push in the two folded eject levers simultaneously to firmly connect the plug-in board to the connector on the motherboard.
- When reattaching the upper lid (rear) assembly, be sure to insert the protrusions in the square holes on the chassis, and then secure the lid.
- Tighten the fixing screws as following torque.
  Tightening torque: 120×10^{-2} N•m {12.2 kgf•cm}

1-16. Taking Out the Cassette in Tape Slacking

When slacking the tape in this unit, follow the steps below to take out the cassette tape.

Notes

- Turn off the power and unplug the power cord before removing/reattaching the board.
- Being careful not to damage the tape, take out the cassette tape with care.

1. Fully loosen the fixing screw.
2. Slide the knobs on upper lid (front) assembly each in the inside. (Move the knobs to the outside to fix the upper lid (front) assembly.
3. Remove the upper lid (front) assembly.

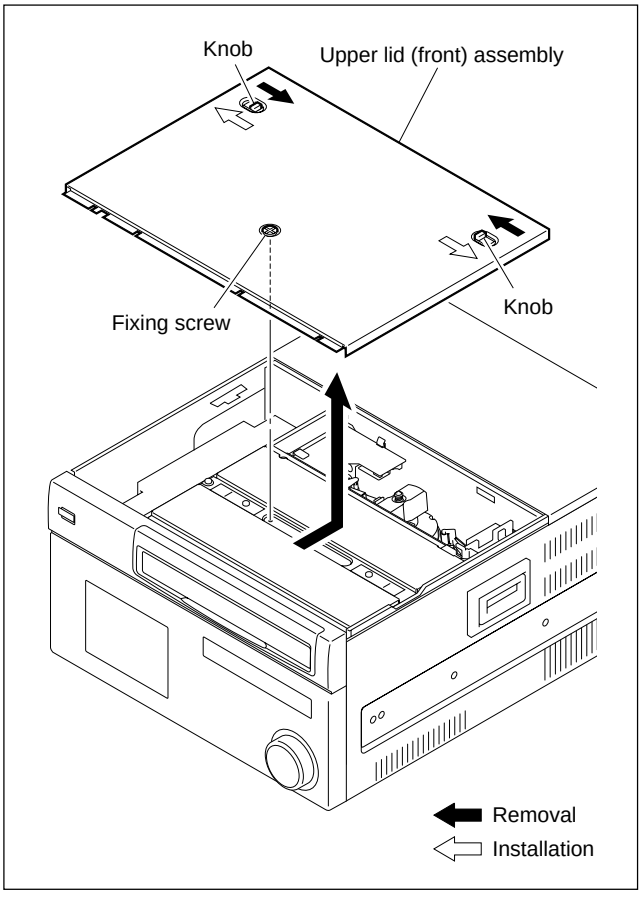

4. Release the lock of the board holder and open the AE-31 board in the arrow direction.
5. Check by eye that the unit is in the state to be able to wind manually the tape.
6. Pull the ME wire for a few times with short steps to take up the tape inside the cassette.

   Notes

   - Be careful for the tape not to catch in parts such as a flange of a tape guide.
   - Don't take the ME wire off the wire holder.
   - The ME wire links with the T real table.
     The T real table rotates about 1/24 turns clockwise (take-up direction) by pulling the ME wire about 6 mm.
7. Rotate the M gear of the threading motor block in the arrow direction on the EJECT label by about a half turn to slack off the tape.
8. Pull the ME wire for a few times with short steps in the arrow direction on the EJECT label to take up the tape inside the cassette.

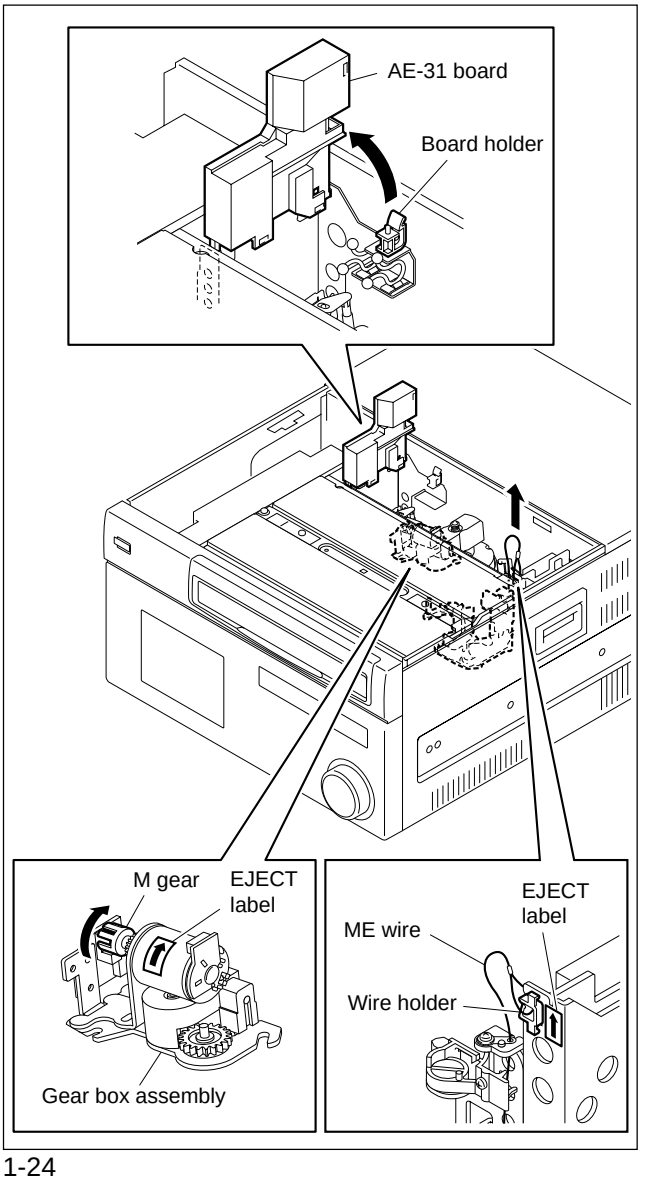

9. To wind up the tape into the cassette, repeat steps 7 and 8.
10. Check that the ME wire is slacken.

    Note

    On completely winding up the tape into the cassette, the M gear will be tighten.
    (Unthreading end state)

11. Open the lower control panel.
12. Turn the eject knob in the arrow direction on the label until the cassette is completely ejected.

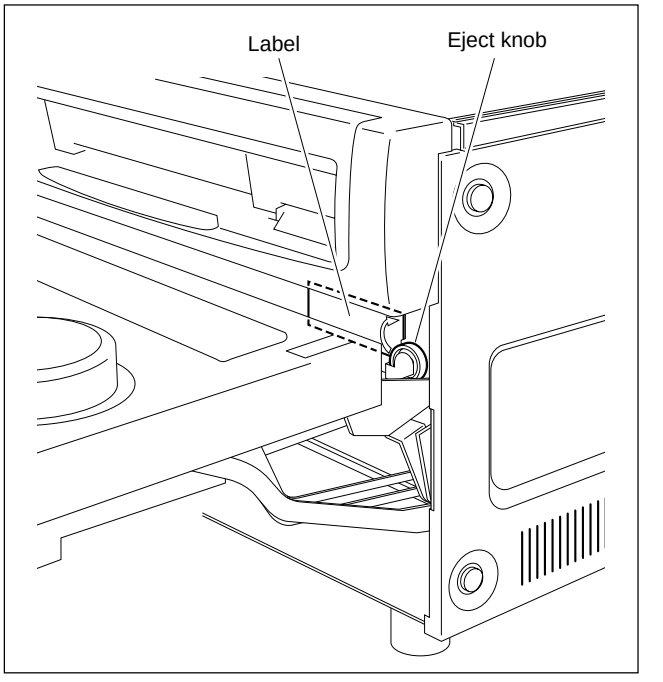

Appendix A
Setting Check Sheet

It is recommended to copy these check sheets and write down the setup conditions (switch and so on) under the application.
If the setting is changed temporarily by changing operating condition, the setting can be reset easily.
For the setup menu, store the setting values to the Memory Stick (Memory Card) before check, maintenace and repair. (Refer to the operation manual.)
It is recommended to attach the sheets to the unit when check, maintenance and repair.
If the unit is used frequently by changing the combination of each system, making the sheets are convenient.
(Make use of the check sheets in prevention of setting error.)

Model name: _____ Serial No.: _____

- Firmware

  SYS1 ROM version: _____
  SYS2 ROM version: _____
  SY ROM version: _____
  CP ROM version: _____

- RS-232C baud rate: _____ bps

- Hours meter

  Write down the value of hours meter when checking, servicing, and maintaining.

ITEM	Date	Hours meter
H01: OPERATION HOURS	/	
H02: DRUM RUNNING HOURS	/	
H03: TAPE RUNNING HOURS	/	
H04: THREADING COUNTER	/	
H12: DRUM RUNNING HOURS (Resettable)	/	
H13: TAPE RUNNING HOURS (Resettable)	/	
H14: THREADING COUNTER (Resettable)	/	

Connector panel

Switch	Factory setting	Setting	
Reference video input 1 75 Ω	ON	☐ ON	☐ OFF
Reference video input 2 75 Ω	ON	☐ ON	☐ OFF

Upper control panel

Switch	Factory setting	Setting	
REMOTE 1 (9P)	LOCAL	☐ Lighting (REMOTE)	☐ Lightless (LOCAL)
REMOTE 2 (50P)	LOCAL	☐ Lighting (REMOTE)	☐ Lightless (LOCAL)

Switches on the board

Note

Never change the setting of Factory use switches.

Board	Name	Channel	Switch No.	Factory setting	Setting
AE-31	HEAD TUNE switch	CH1	S100	Factory use	—
		CH2	S200	Factory use	—
	Analog audio output level/ output headroom	CH1	S1200	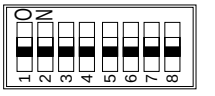 +4 dBm/–20 dB	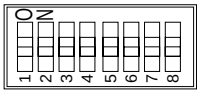 (dBm/ dB)
		CH2	S2200	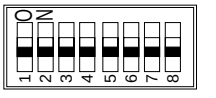 +4 dBm/–20 dB	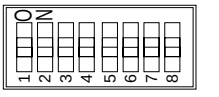 (dBm/ dB)
		CH3	S3200	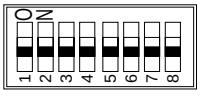 +4 dBm/–20 dB	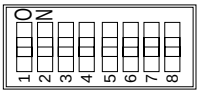 (dBm/ dB)
		CH4	S4200	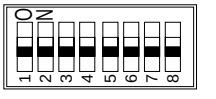 +4 dBm/–20 dB	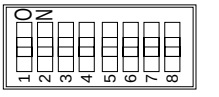 (dBm/ dB)
	Monitor output level/ output headroom	R	S1300	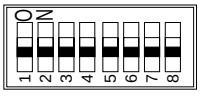 +4 dBm/–20 dB	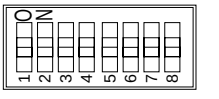 (dBm/ dB)
		L	S2300	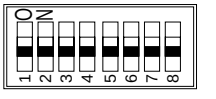 +4 dBm/–20 dB	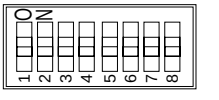 (dBm/ dB)
CUE-13	CUE audio output level	—	S101	+4 dBm/600 Ω	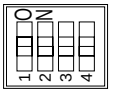 (dBm/600 Ω)

Output level/ Output headroom	S1200/S2200 S3200/S4200 S1300/S2300
+4 dBm/–20 dB	all OFF
–3 dBm/–18 dB	only 1-bit to ON
+1 dBm/–18 dB	only 2-bit to ON
0 dBm/–18 dB	only 3-bit to ON
0 dBm/–12 dB	only 4-bit to ON
+4 dBm/–18 dB	only 5-bit to ON
+4 dBm/–16 dB	only 6-bit to ON
+6 dBm/–16 dB	only 8-bit to ON

(Continued)

Note

The following switches are Factory use.
Never change the setting.

Board	Switch No.	Factory setting
APR-62	S400	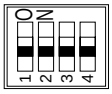
	S701	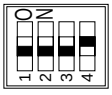
CP-382	S1	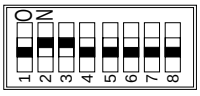
	S2	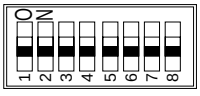
	S300	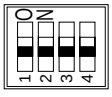
EQ-94	S2201	
	S2901	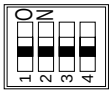
HIF-8	S900	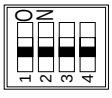
HPR-8	S200	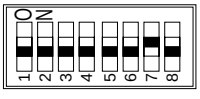
	S600	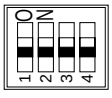
	S2000	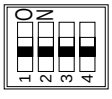

(Continued)

Board	Switch No.	Factory setting
IRC-5	S400	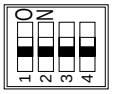
	S700	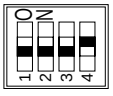
	S800	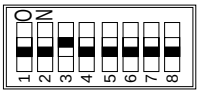
SS-95	S100	
	S101	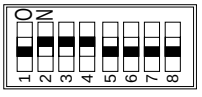
	S500	
	S501	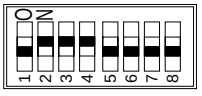
	S600	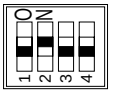
	S802	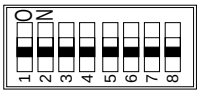
VPR-79	S100	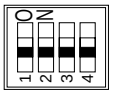
	S700	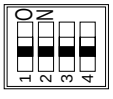

このマニュアルに記載されている事柄の著作権は当社にあります。
従って，当社の許可なしに無断で複写したり，説明内容（操作，保守等）と異なる目的で本マニュアルを使用することを禁止します。

The material contained in this manual consists of information that is the property of Sony Corporation.
Sony Corporation expressly prohibits the duplication of any portion of this manual or the use thereof for any purpose other than the operation or maintenance of the equipment described in this manual without the express written permission of Sony Corporation.

Le matériel contenu dans ce manuel consiste en informations qui sont la propriété de Sony Corporation.
Sony Corporation interdit formellement la copie de quelque partie que ce soit de ce manuel ou son emploi pour tout autre but que des opérations ou entretiens de l'équipement à moins d'une permission écrite de Sony Corporation.

Das in dieser Anleitung enthaltene Material besteht aus Informationen, die Eigentum der Sony Corporation sind.
Die Sony Corporation untersagt ausdrücklich die Vervielfältigung jeglicher Teile dieser Anleitung oder den Gebrauch derselben für irgendeinen anderen Zweck als die Bedienung oder Wartung der in dieser Anleitung beschriebenen Ausrüstung ohne ausdrückliche schriftliche Erlaubnis der Sony Corporation.

SRW-5000 (SY) E
3-791-086-01

Sony Corporation
B&P Company

Printed in Japan
2003. 6 08
©2003